SCHAEFER

Access control

EKS 42 Mega / EKS 50 Mega

Access Control System

EKS 42 Mega
central unit

EKS 50 Mega
central unit

MegaBean
switching
module

Characteristics

Description	The system consists of a central unit, the EKS Mega, and several MegaBeans which are connected to it within a fixture, COP-Panel, or similar. It manages up to 255 transponder identifiers. For each authorized transponder any combination of connected control devices (MegaBean + button) can be activated. Optionally the reading procedure of a transponder can be signalised optically with the EKS Mega. Acoustic signals confirm all actions, especially operation of controlling devices if no valid transponder was detected. Assembly is possible both during fixture production as well as retrofit for existing installations of any manufacturer, as long as the electrical requirements (voltage range, current consumption of recall light) are met. The application profile can be changed easily and quickly on site. It is also possible to delete lost transponders from the system without any additional hardware.
Power supply	20 V ... 30 V DC smoothed
permissible output current of the system	max. 2 A
Temperature range	-25 °C ... +65 °C
Number of participants	max. 255 transponder identifiers

Electronic Key Switches
EKS 42 / EKS 50 I. 8.20 – I. 8.27

EKS 42 Mega/EKS 50 Mega

Transponder

ISO-Card

KeyTag

BlueTag

StrongTag

Transponders with key function are available in four variants:

– ISO-Card "KeyCard"

– key ring pendant "KeyTag"

– key ring pendant "BlueTag"

– key ring pendant "StrongTag"

All four variants have identical functions.

Every transponder (electronic key) is a unique specimen with a non-recurring and unchangeable identifier.

Particular transponders can be deleted from the memory of the EKS Mega. Additional transponders can be stored into the EKS Mega on site.

The EKS Mega can memorize up to 255 different transponder identifiers.

As a rule, the EKS Mega is being delivered ready for installation, i. e. the enclosed transponders are stored in the memory of the EKS Mega and the desired configuration is set.

By means of the optionally available special function cards

- ProgrammingCard
- ResetCard
- DeleteCard

the configuration of the EKS Mega can be modified.

⚠ Customized designs available on request.

REVISION a Update / 2013-06

EKS 42 Mega Style MT 28 Q, Style MT 28 R

Central unit

EKS 42 Mega
Style MT 28 Q

EKS 42 Mega
Style MT 28 R

Please order fixing accessories separately.

Characteristics

Fixing	welding studs M3 x 20
Faceplate thickness	2 mm ... 3 mm
Connection technology	0.1 mm² ... 1 mm² AWG 28 ribbon cable
Power supply	U = 20 V ... 30 V DC smoothed
Stand-by current	24 V max. 60 mA with maximum permanent illumination
Operating current	24 V max. 80 mA with two activated relays
Switching element	switching voltage = max. 60 V DC / 50 V AC switching current = max. 1 A switching capacity = max. 30 W
Recall light / permanent illumination	LED recall light and permanent illumination can be individually set at three different luminosity levels: dark, medium, bright
Temperature range	-25 °C ... +65 °C
Number of participants	max. 255 transponder identifiers
Transponder technology	type "read only" 64 Bit, 40 Bit Data frequency 125 kHz possible identifiers 1.1 x 10^{12} detection time approx. 0.2 s

Rear view

Dimensions

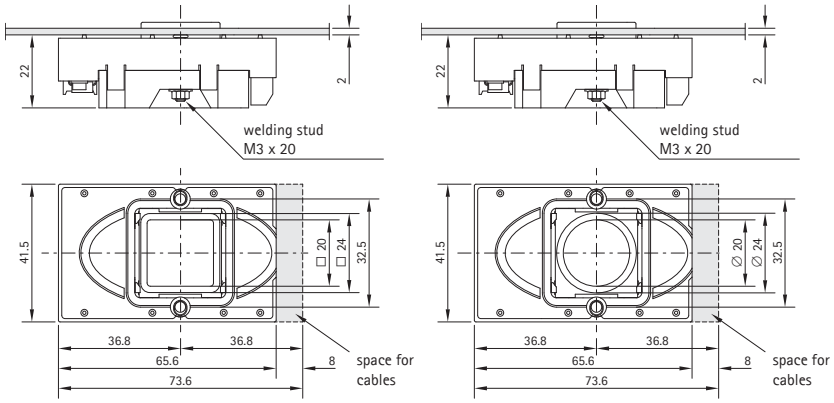

Wiring diagram

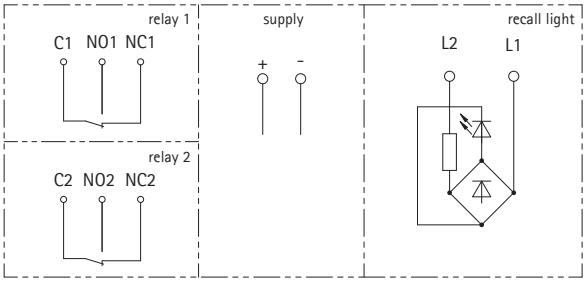

Cutout

Marking

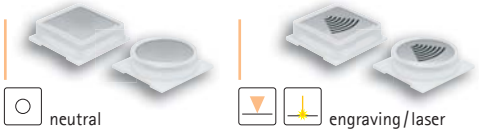

EKS 42 Mega Style MT 42

Central unit

Characteristics

Fixing	clip fixing
Faceplate thickness	2 mm ... 3 mm
Connection technology	0.1 mm² ... 1 mm² AWG 28 ribbon cable
Power supply	U = 20 V ... 30 V DC smoothed
Stand-by current	24 V max. 60 mA with maximum permanent illumination
Operating current	24 V max. 80 mA with two activated relays
Switching element	switching voltage = max. 60 V DC / 50 V AC switching current = max. 1 A switching capacity = max. 30 W
Recall light / permanent illumination	LED recall light and permanent illumination can be individually set at three different luminosity levels: dark, medium, bright
Temperature range	-25 °C ... +65 °C
Number of participants	max. 255 transponder identifiers
Transponder technology	type "read only" 64 Bit, 40 Bit Data frequency 125 kHz possible identifiers 1.1×10^{12} detection time approx. 0.2 s

Rear view

Dimensions

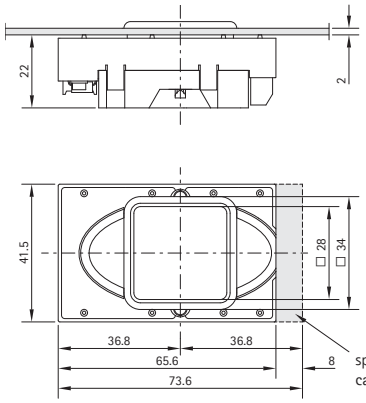

Wiring diagram

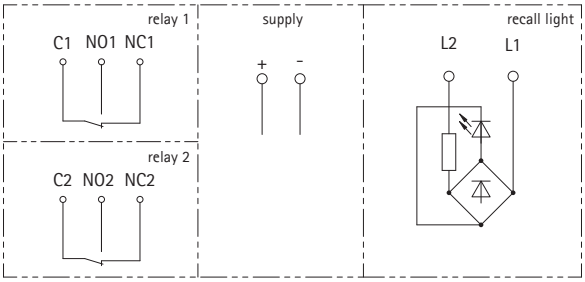

Cutout

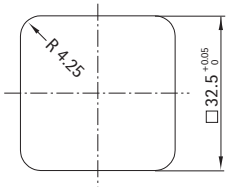

Marking

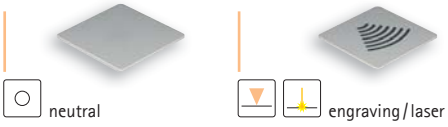

REVISION a Update / 2013-06

II

EKS 42 Mega Style RT 42, Style RT 42 wg

Central unit

EKS 42 Mega
Style RT 42

EKS 42 Mega
Style RT 42 wg

Compliance Style RT 42 wg

EN 81-71 CLASS 1 EN 81-72

PITCH 42 75

Characteristics

Fixing	clip fixing
Faceplate thickness	2 mm ... 3 mm
Connection technology	2×5 0.1 mm² ... 1 mm² 6 AWG 28 ribbon cable
Power supply	U = 20 V ... 30 V DC smoothed
Stand-by current	24 V max. 60 mA with maximum permanent illumination
Operating current	24 V max. 80 mA with two activated relays
Switching element	switching voltage = max. 60 V DC / 50 V AC switching current = max. 1 A switching capacity = max. 30 W
Recall light / permanent illumination	LED recall light and permanent illumination can be individually set at three different luminosity levels dark, medium, bright
Temperature range	-25 °C ... +65 °C
Number of participants	max. 255 transponder identifiers
Transponder technology	type "read only" 64 Bit, 40 Bit Data frequency 125 kHz possible identifiers 1.1 x 10^{12} detection time approx. 0.2 s

Rear view

Dimensions

Style RT 42

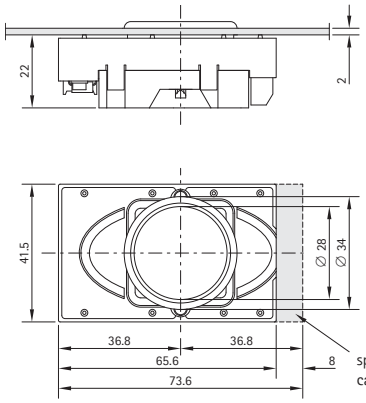

Style RT 42 wg

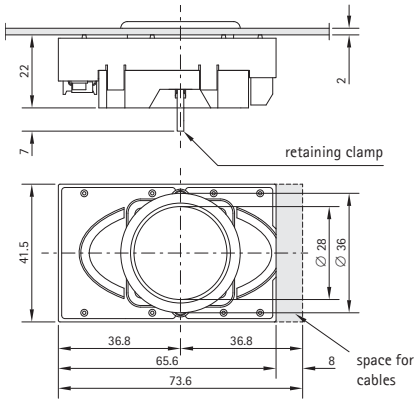

Wiring diagram

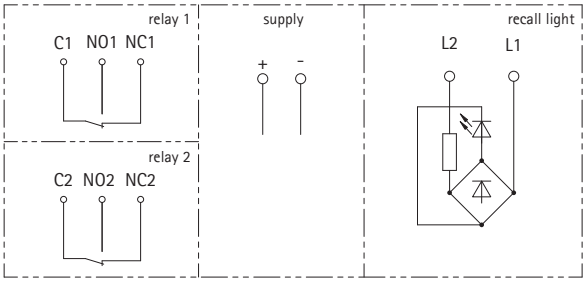

Cutout

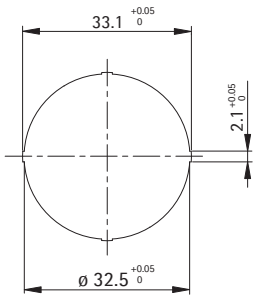

Marking

neutral

engraving / laser

REVISION a Update / 2013-06

EKS 42 Mega Style EB 42

Central unit

Characteristics

Fixing	clip fixing
Faceplate thickness	2 mm ... 3 mm
Connection technology	2×5 0.1 mm² ... 1 mm² / 6 AWG 28 ribbon cable
Power supply	U = 20 V ... 30 V DC smoothed
Stand-by current	24 V max. 60 mA with maximum permanent illumination
Operating current	24 V max. 80 mA with two activated relays
Switching element	switching voltage = max. 60 V DC / 50 V AC switching current = max. 1 A switching capacity = max. 30 W
Recall light / permanent illumination	LED recall light and permanent illumination can be individually set at three different luminosity levels dark, medium, bright
Temperature range	-25 °C ... +65 °C
Number of participants	max. 255 transponder identifiers
Transponder technology	type "read only" 64 Bit, 40 Bit Data frequency 125 kHz possible identifiers 1.1×10^{12} detection time approx. 0.2 s

Rear view

Dimensions

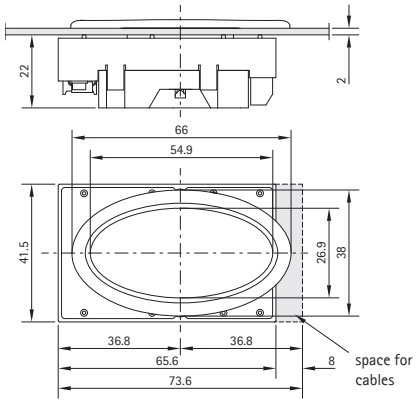

Wiring diagram

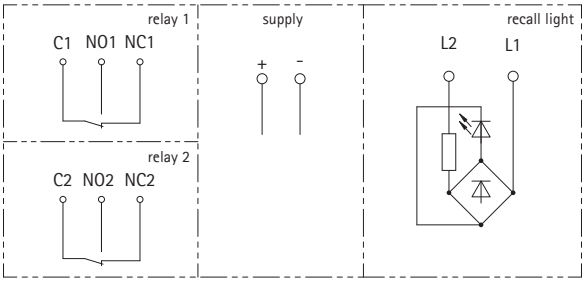

Cutout

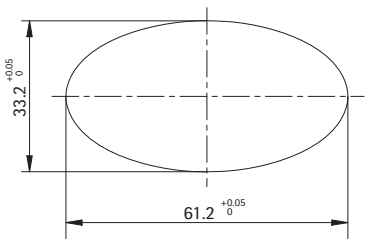

Marking

neutral

engraving / laser

REVISION a

Update / 2013-06

II

EKS 42 Mega VP

Central unit, vandal-resistant

Compliance EKS 42 Mega VP

EN 81-71 CLASS 2 EN 81-72

Please order fixing accessories separately.

Characteristics

When mounted behind a stainless steel faceplate there is no need for a cutout for the EKS 42 Mega in the faceplate. The reader unit will be fixed at the rear of the faceplate by means of welding studs and the reading area will be marked on the front of the faceplate in any way.

This variant is advantageous for example in connection with large push buttons or non-SCHAEFER products to be independent from the design.

With no access from the front the device is furthermore safe from manipulation, thus save from vandalism, water and dust.

Fixinf	welding studs M3 x 20
Faceplate thickness	st. steel, 2 mm
Connection technology	2×5 0.1 mm² ... 1 mm² / 6 AWG 28 ribbon cable
Power supply	U = 20 V ... 30 V DC smoothed
Stand-by current	24 V max. 40 mA
operating current	24 V max. 60 mA with two activated relays
Switching element	switching voltage = max. 60 V DC / 50 V AC switching current = max. 1 A switching capacity = max. 30 W
Temperature range	-25 °C ... +65 °C
Number of participants	max. 255 transponder identifiers
Transponder technology	type "read only" 64 Bit, 40 Bit Data frequency 125 kHz possible identifiers 1.1 x 10^{12} detection time approx. 0.2 s

Rear view

Wiring diagram

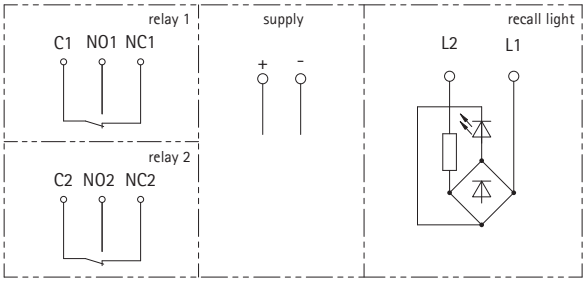

Dimensions

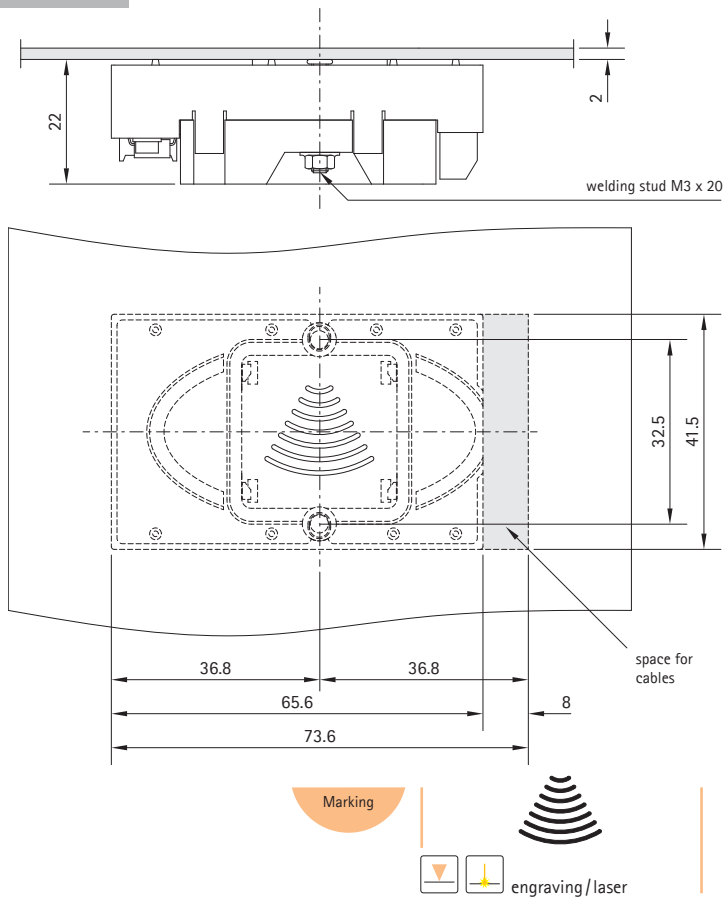

EKS 50 Mega

Central unit

EKS 50 Q Mega

EKS 50 R Mega

option: compliance

EN 81-71 CLASS 1 | EN 81-71 CLASS 2 | EN 81-72

Please order fixing accessories separately.

PITCH 63 75

Characteristics

Fixing	spacer + nut
Faceplate thickness	2 ... 10 mm, up to 6 mm with spacer, as from 6 mm without spacer
Connection technology	2×5 — 0.1 mm² ... 1 mm² / 6 — AWG 28 ribbon cable
Power supply	U = 20 V ... 30 V DC smoothed
Stand-by current	24 V max. 60 mA with maximum permanent illumination
Operating current	24 V max. 80 mA with two activated relays
Switching element	switching voltage = max. 60 V DC / 50 V AC switching current = max. 1 A switching capacity = max. 30 W
Recall light / permanent illumination	LED recall light and permanent illumination can be individually set at three different luminosity levels dark, medium, bright
Temperature range	-25 °C ... +65 °C
Number of participants	max. 255 transponder identifiers
Transponder technology	type "read only" 64 Bit, 40 Bit Data frequency 125 kHz possible identifiers 1.1×10^{12} detection time approx. 0.2 s

Rear view

Dimensions

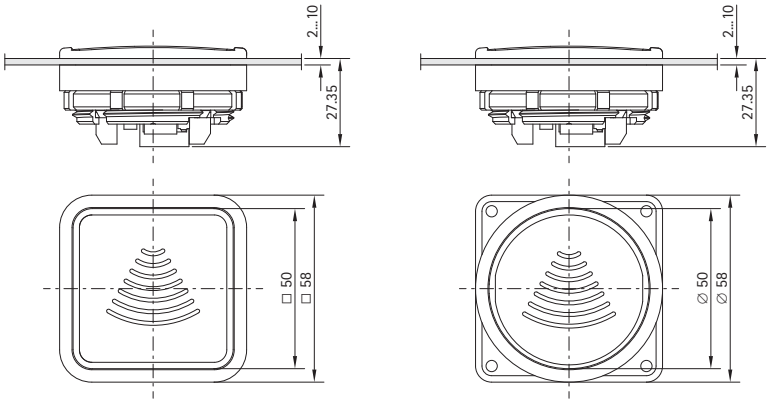

Wiring diagram

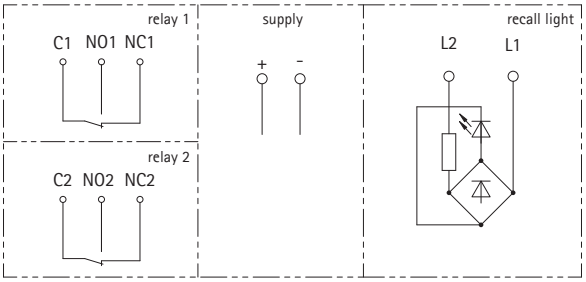

Cutout

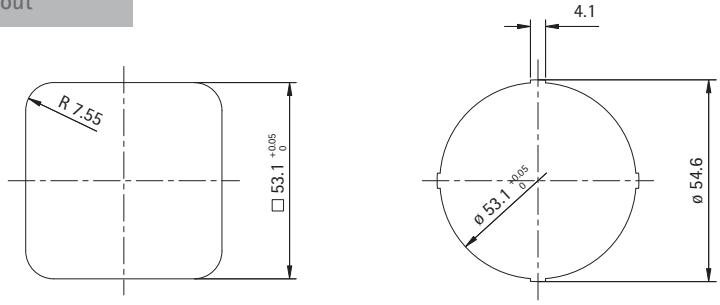

Marking

neutral

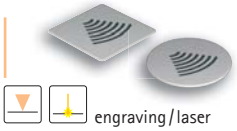

engraving / laser

50 Material code I. 4.23

Update / 2013-06

REVISION a

II

MegaBeans

Switching modules

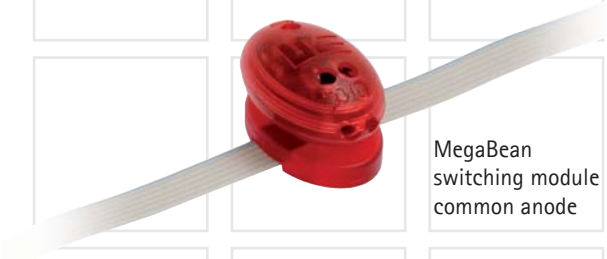

MegaBean switching module common anode

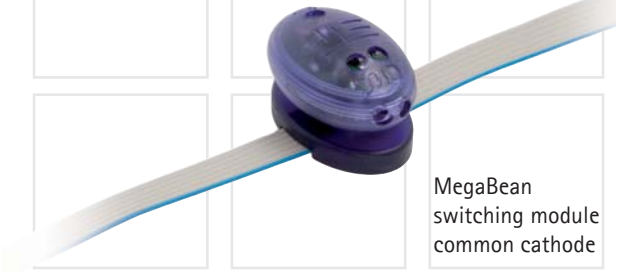

MegaBean switching module common cathode

Characteristics

Fixing	adhesive bond between fixing plate and faceplate	
Connection technology	0.1 mm² ... 1.0 mm²	AWG 28 ribbon cable
Variants	3-wire technology, common anode 3-wire technology, common cathode 4-wire technology, common anode 4-wire technology, common cathode	
Power supply	U = 20 V ... 30 V DC smoothed stand-by current = max. 8 mA operating current = max. 200 mA for button and controller	
Housing colour	common anode common cathode	red blue

Dimensions

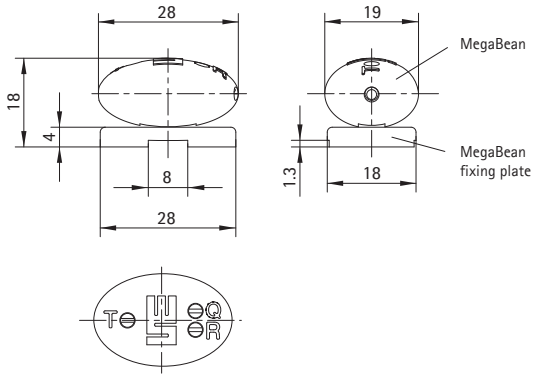

EKS Mega/MegaBeans

Wiring diagrams

3-wire technology

Wiring Diagrams 3-Draht, common anode

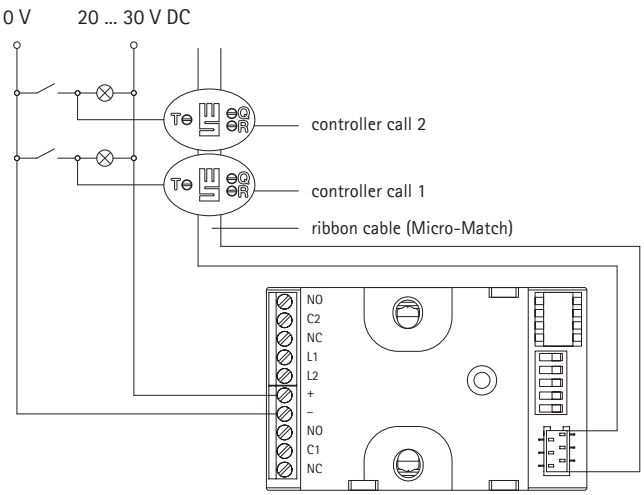

4-wire technology

Wiring Diagrams 4-Draht, common anode

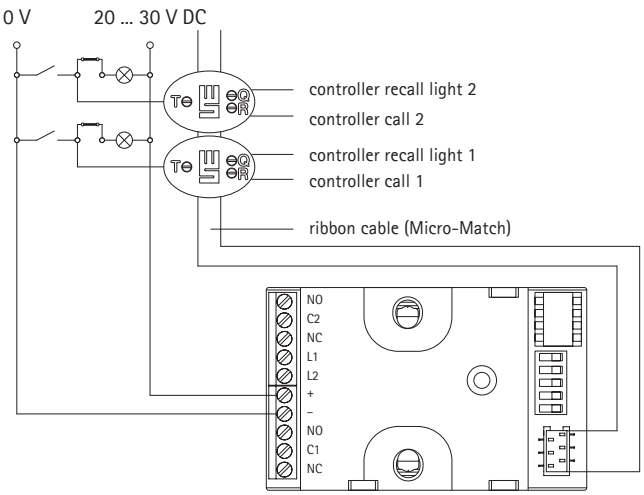

Wiring Diagrams 3-Draht, common cathodee

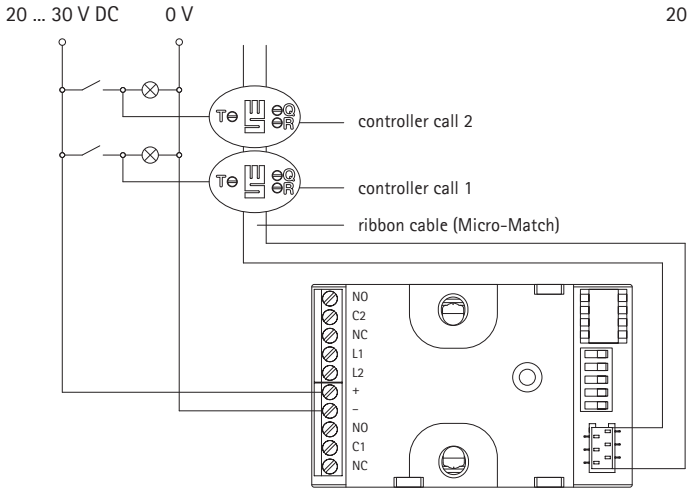

Wiring Diagrams 4-Draht, common cathode

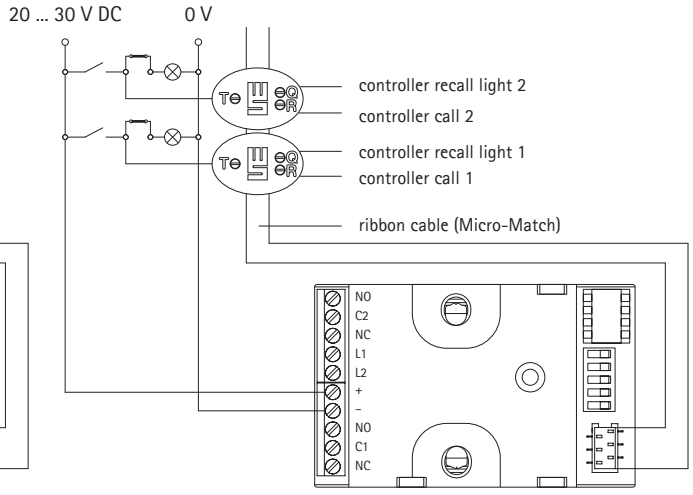

REVISION a
Update / 2013-06

EKS Mega / MegaBeans

Mounting / Installation

Characteristics

EKS Mega and MegaBeans are mounted at the rear of the faceplate. Depending on the Style, the central unit is fixed by means of welding studs or by clip fixing and the fixing plates of the switching modules MegaBean are fixed to the faceplate by an adhesive bond.

Via a 6-pole ribbon cable with Micro-Match type connectors the EKS Mega is connected with the MegaBeans. These connectors fit any way. Each button, which is meant to be included in the access control system, needs an own MegaBean. The MegaBeans are connected between button and controller. Thus it is also possible to retrofit existing fixtures.

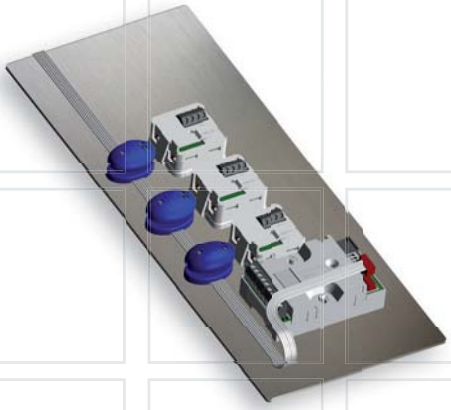

installation with single-row fixtures

installation with double-row fixtures

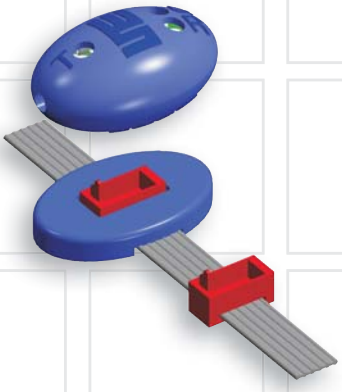

MegaBean with fixing plate and ribbon cable

EKS 42 Access/EKS 50 Access

Topology

Description

EKS 42 Access respectively EKS 50 Access is employed for access control systems with centralized control.

The key card is read in by the reader unit of the EKS 42 Access/EKS 50 Access and its identifier is sent to the connected CANnode CN 16. This node transfers the data to a central unit which decides about the access authorization. The data with the result is sent back to the CANnode CN 16. Then the CANnode releases the respective call buttons; this can be visualized by a flashing recall light. At the same time, EKS 42 Access/EKS 50 Access receives a corresponding confirmation signal and can thus signalize release or denial by means of LEDs.

The key cards need to be read in to the central unit only once and are then valid for the entire system.

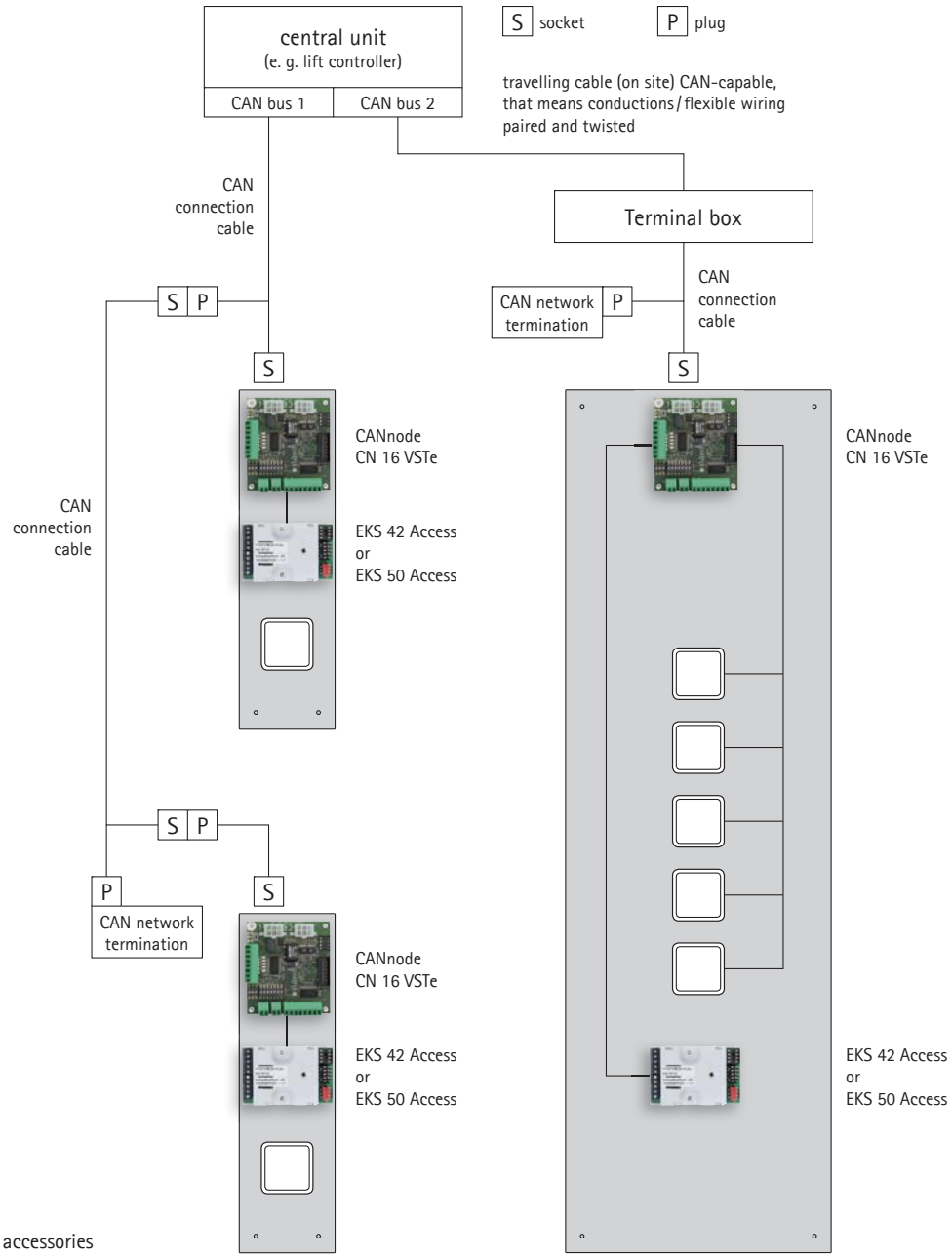

CANopen
Cables/accessories
IV. 1.20 – 1.23

EKS 42 Access/EKS 50 Access

Transponder

ISO-Card

KeyTag

BlueTag

StrongTag

Transponders with key function are available in four variants:

– ISO-Card "KeyCard"
– key ring pendant "KeyTag"
– key ring pendant "BlueTag"
– key ring pendant "StrongTag"

All four variants have identical functions.

Every transponder (electronic key) is a unique specimen with a non-recurring and unchangeable identifier.

Saving and deleting of transponders as well as determination of authorizations is done in a centre that corresponds with the CANopen protocol.

EKS 42 Access Style MT 28 Q, Style MT 28 R

Reader unit

EKS 42 Access
Style MT 28 Q

EKS 42 Access
Style MT 28 R

Please order fixing accessories separately.

Characteristics

Fixing	welding studs M3 x 20
Faceplate thickness	2 mm ... 3 mm
Connection technology	0.1 mm² ... 1 mm² AWG 28 ribbon cable
Connection	with CANnode CN16 as from software version 2.2.0
Power supply	U = 12 V ... 30 V DC smoothed
Stand-by current	12 V max. 120 mA / 24 V max. 60 mA with maximum permanent illumination
Operating current	12 V max. 150 mA / 24 V max. 80 mA with two activated relays
Switching element	switching voltage = max. 60 V DC / 50 V AC switching current = max. 1 A switching capacity = max. 30 W
Recall light / permanent illumination	LED recall light and permanent illumination can be individually set at three different luminosity levels: dark, medium, bright
Temperature range	-25 °C ... +65 °C
Number of participants	unlimited
Transponder technology	type "read only" 64 Bit, 40 Bit Data frequency 125 kHz possible identifiers 1.1 x 10^{12} detection time approx. 0.2 s

Rear view

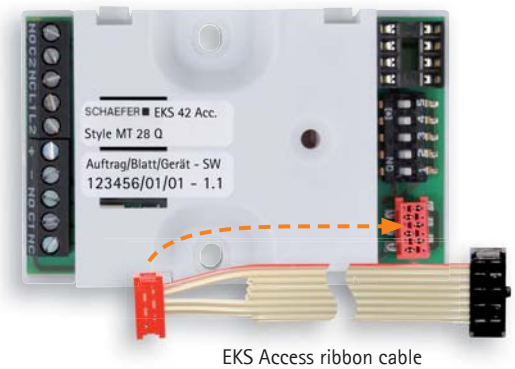

EKS Access ribbon cable

Dimensions

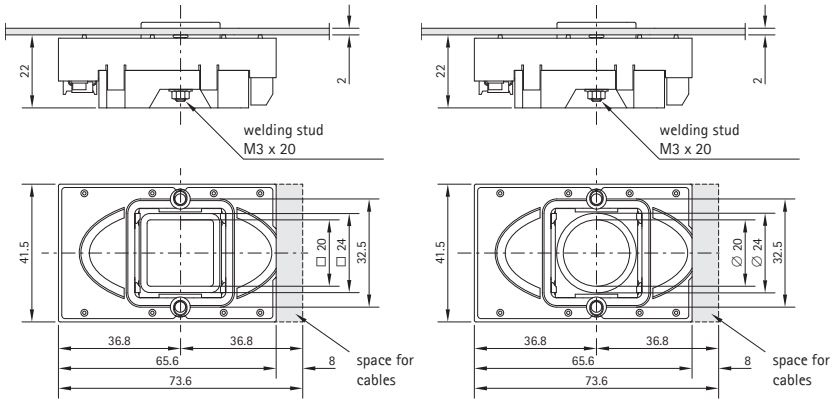

Wiring diagram

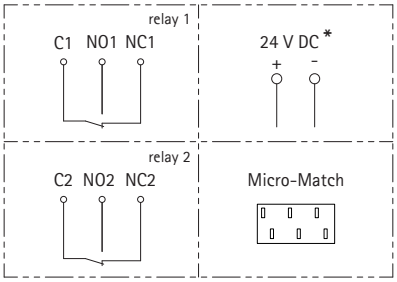

*Do not connect!
Supply via CANnode

Cutout

Marking

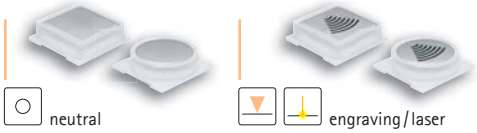

EKS 42 Access Style MT 42

Reader unit

Characteristics

Fixing	clip fixing
Faceplate thickness	2 mm ... 3 mm
Connection technology	0.1 mm² ... 1 mm² AWG 28 ribbon cable
Connection	with CANnode CN16 as from software version 2.2.0
Power supply	U = 12 V ... 30 V DC smoothed
Stand-by current	12 V max. 120 mA / 24 V max. 60 mA with maximum permanent illumination
Operating current	12 V max. 150 mA / 24 V max. 80 mA with two activated relays
Switching element	switching voltage = max. 60 V DC / 50 V AC switching current = max. 1 A switching capacity = max. 30 W
Recall light / permanent illumination	LED recall light and permanent illumination can be individually set at three different luminosity levels: dark, medium, bright
Temperature range	-25 °C ... +65 °C
Number of participants	unlimited
Transponder technology	type "read only" 64 Bit, 40 Bit Data frequency 125 kHz possible identifiers 1.1×10^{12} detection time approx. 0.2 s

Rear view

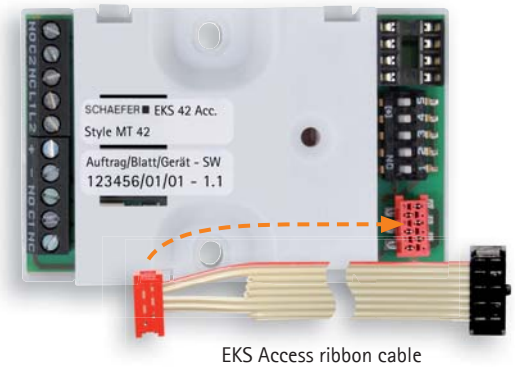

EKS Access ribbon cable

Dimensions

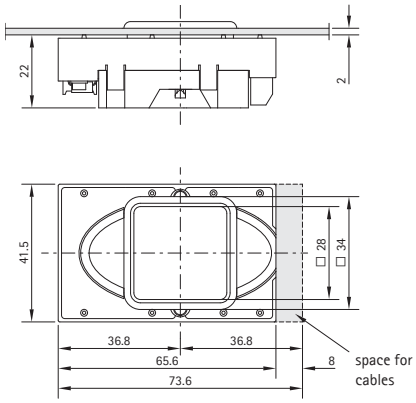

Wiring diagram

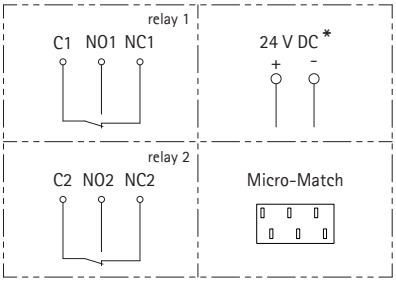

*Do not connect!
Supply via CANnode

Cutout

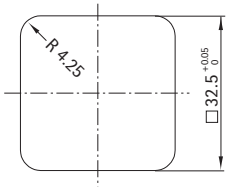

Marking

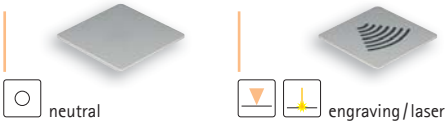

REVISION a Update / 2013-06

EKS 42 Access Style RT 42, Style RT 42 wg

Reader unit

EKS 42 Access
Style RT 42

EKS 42 Access
Style RT 42 wg

Compliance Style RT 42 wg

EN 81-71 CLASS 1 EN 81-72

PITCH 42 75

Characteristics

Fixing	clip fixing
Faceplate thickness	2 mm ... 3 mm
Connection technology	2×5 0.1 mm² ... 1 mm² 6 AWG 28 ribbon cable
Connection	with CANnode CN16 as from software version 2.2.0
Power supply	U = 12 V ... 30 V DC smoothed
Stand-by current	12 V max. 120 mA / 24 V max. 60 mA with maximum permanent illumination
Operating current	12 V max. 150 mA / 24 V max. 80 mA with two activated relays
Switching element	switching voltage = max. 60 V DC / 50 V AC switching current = max. 1 A switching capacity = max. 30 W
Recall light / permanent illumination	LED recall light and permanent illumination can be individually set at three different luminosity levels dark, medium, bright
Temperature range	-25 °C ... +65 °C
Number of participants	unlimited
Transponder technology	type "read only" 64 Bit, 40 Bit Data frequency 125 kHz possible identifiers 1.1 x 10^{12} detection time approx. 0.2 s

Rear view

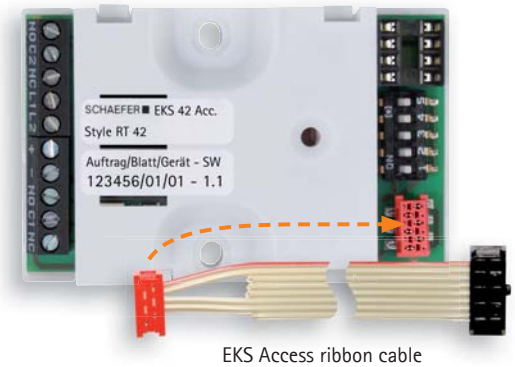

EKS Access ribbon cable

Dimensions

Style RT 42

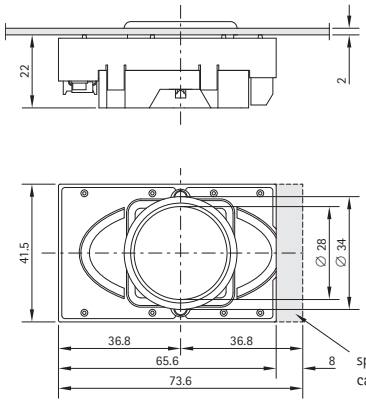

Style RT 42 wg

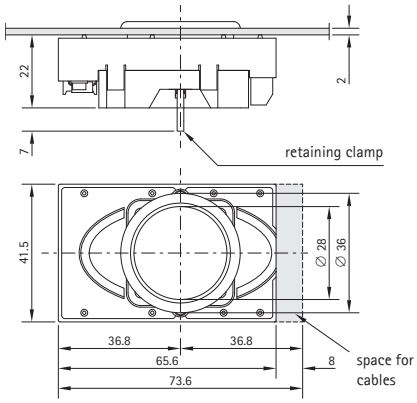

Wiring diagram

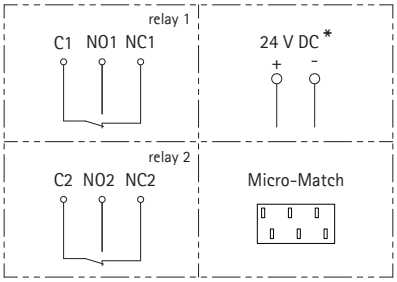

*Do not connect!
Supply via CANnode

Cutout

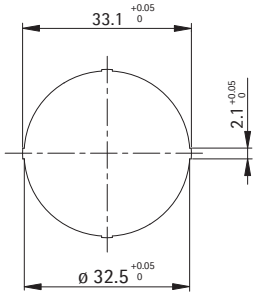

Marking

neutral

engraving / laser

Update / 2013-06
REVISION a

EKS 42 Access Style EB 42

EPSILON

Reader unit

Characteristics

Fixing	clip fixing
Faceplate thickness	2 mm ... 3 mm
Connection technology	2×5 0.1 mm² ... 1 mm² / 6 AWG 28 ribbon cable
Connection	with CANnode CN16 as from software version 2.2.0
Power supply	U = 12 V ... 30 V DC smoothed
Stand-by current	12 V max. 120 mA / 24 V max. 60 mA with maximum permanent illumination
Operating current	12 V max. 150 mA / 24 V max. 80 mA with two activated relays
Switching element	switching voltage = max. 60 V DC / 50 V AC switching current = max. 1 A switching capacity = max. 30 W
Recall light / permanent illumination	LED recall light and permanent illumination can be individually set at three different luminosity levels dark, medium, bright
Temperature range	-25 °C ... +65 °C
Number of participants	unlimited
Transponder technology	type "read only" 64 Bit, 40 Bit Data frequency 125 kHz possible identifiers 1.1×10^{12} detection time approx. 0.2 s

Rear view

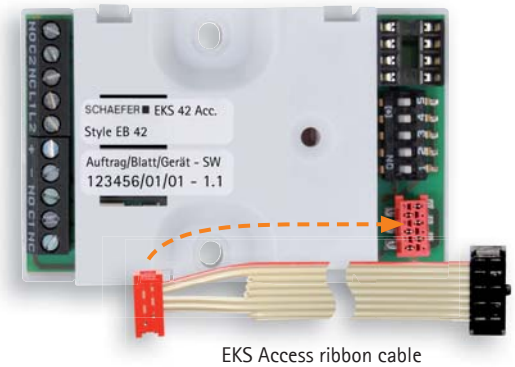

EKS Access ribbon cable

Dimensions

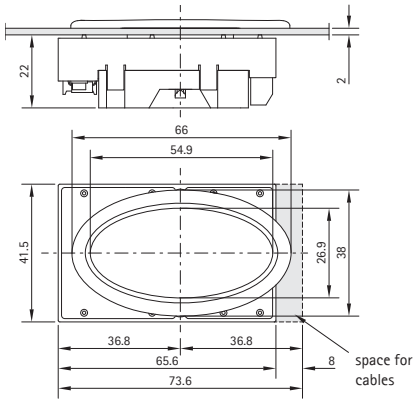

Wiring diagram

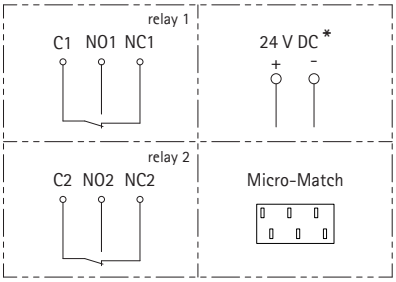

⚠ *Do not connect!
Supply via CANnode

Cutout

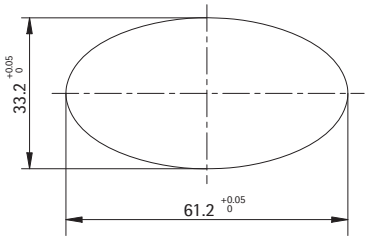

Marking

Update / 2013-06

REVISION a

II

EKS 42 Access VP

Reader unit, vandal-resistant

Compliance EKS 42 Access VP

EN 81-71 CLASS 2 EN 81-72

⚠ Please order fixing accessories separately.

Characteristics

When mounted behind a stainless steel faceplate there is no need for a cutout for the EKS 42 Access in the faceplate. The reader unit will be fixed at the rear of the faceplate by means of welding studs and the reading area will be marked on the front of the faceplate in any way.

This variant is advantageous for example in connection with large push buttons or non-SCHAEFER products to be independent from the design.

With no access from the front the device is furthermore safe from manipulation, thus save from vandalism, water and dust.

Fixinf	welding studs M3 x 20
Faceplate thickness	st. steel, 2 mm
Connection technology	0.1 mm² ... 1 mm² AWG 28 ribbon cable
Connection	with CANnode CN16 as from software version 2.2.0
Power supply	U = 12 V ... 30 V DC smoothed
Stand-by current	12 V max. 70 mA / 24 V max. 40 mA
operating current	12 V max. 100 mA / 24 V max. 60 mA with two activated relays
Switching element	switching voltage = max. 60 V DC / 50 V AC switching current = max. 1 A switching capacity = max. 30 W
Temperature range	-25 °C ... +65 °C
Number of participants	unlimited
Transponder technology	type "read only" 64 Bit, 40 Bit Data frequency 125 kHz possible identifiers 1.1 x 10^{12} detection time approx. 0.2 s

Rear view

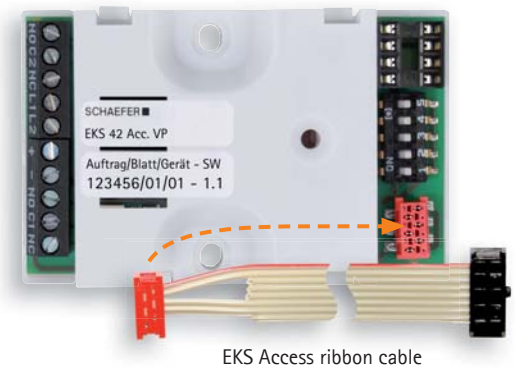

EKS Access ribbon cable

Dimensions

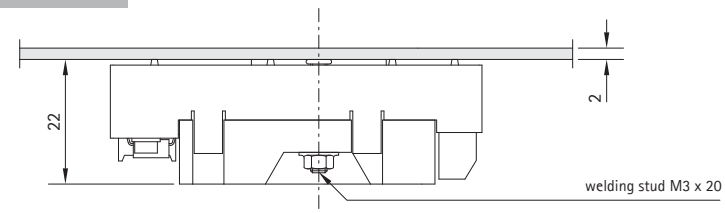

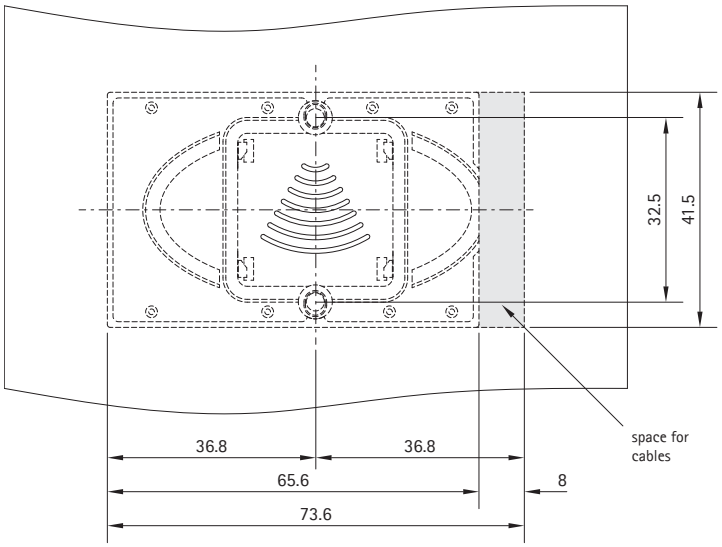

Wiring diagram

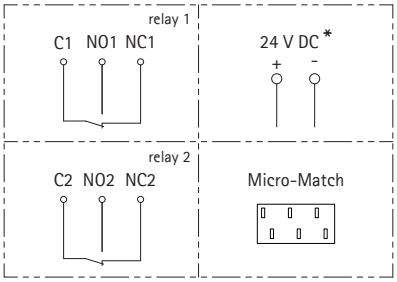

⚠ *Do not connect!
Supply via CANnode

Update / 2013-06

REVISION ⓐ

EKS 50 Access

Reader unit

EKS 50 Q Access

EKS 50 R Access

option: compliance

EN 81-71 CLASS 1 | EN 81-71 CLASS 2 | EN 81-72

Please order fixing accessories separately.

PITCH 63 75

Characteristics

Fixing	spacer + nut
Faceplate thickness	2 ... 10 mm, up to 6 mm with spacer, as from 6 mm without spacer
Connection technology	2×5 0.1 mm² ... 1 mm² / 6 AWG 28 ribbon cable
Connection	with CANnode CN16 as from software version 2.2.0
Power supply	U = 12 V ... 30 V DC smoothed
Stand-by current	12 V max. 120 mA / 24 V max. 60 mA with maximum permanent illumination
Operating current	12 V max. 150 mA / 24 V max. 80 mA with two activated relays
Switching element	switching voltage = max. 60 V DC / 50 V AC switching current = max. 1 A switching capacity = max. 30 W
Recall light / permanent illumination	LED recall light and permanent illumination can be individually set at three different luminosity levels dark, medium, bright
Temperature range	-25 °C ... +65 °C
Number of participants	unlimited
Transponder technology	type "read only" 64 Bit, 40 Bit Data frequency 125 kHz possible identifiers 1.1 x 10^{12} detection time approx. 0.2 s

Rear view

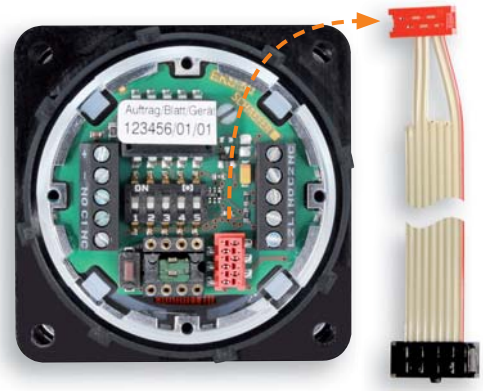

EKS Access ribbon cable

Dimensions

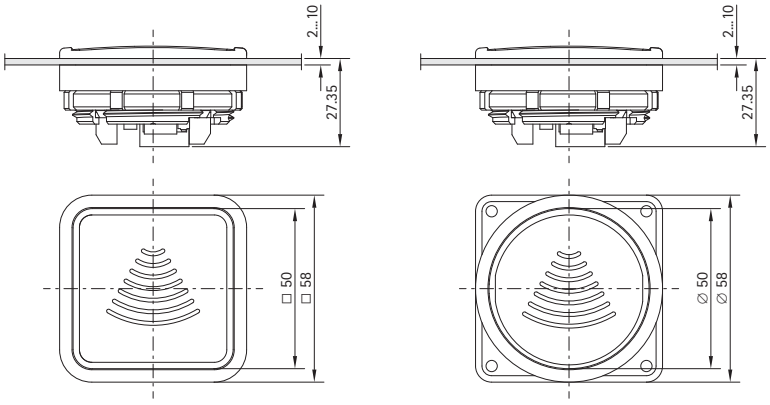

Wiring diagram

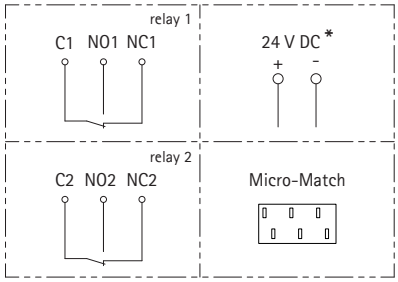

*Do not connect!
Supply via CANnode

Cutout

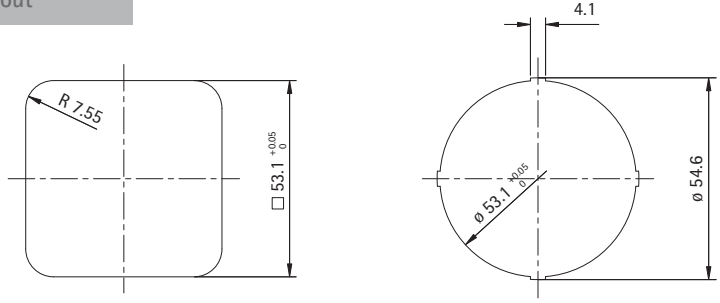

Marking

neutral

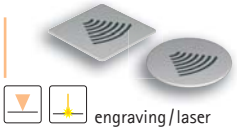

engraving / laser

50 Material code I. 4.23

Update / 2013-06

REVISION a

II